TRUST
CARE

LET'S ENJOY

Article No. LEN101

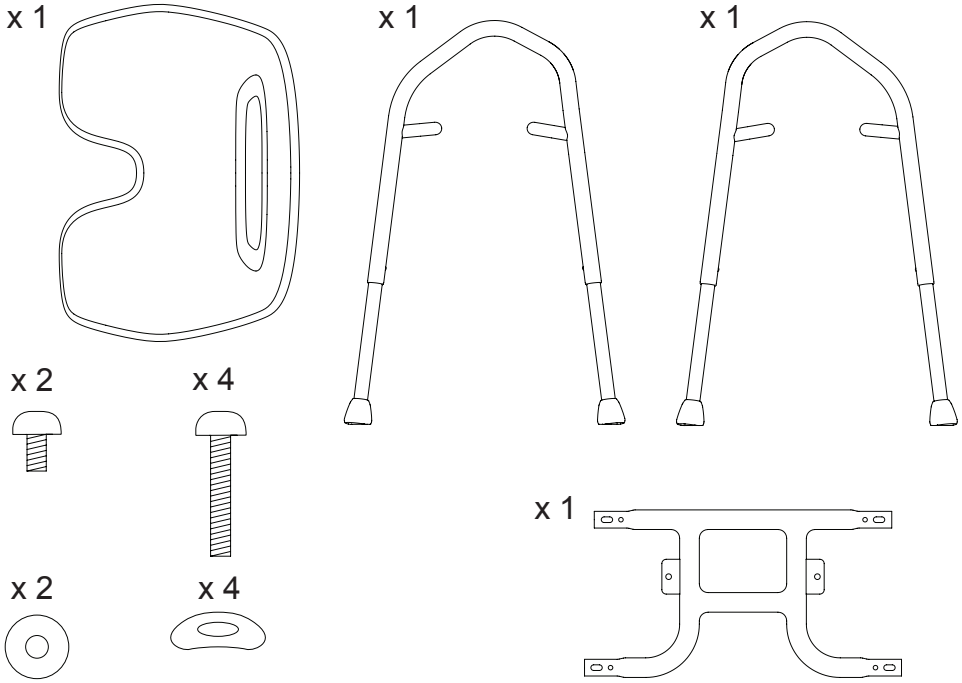
x 1
x 1
x 1
x 2
x 4
x 1
x 2
x 4

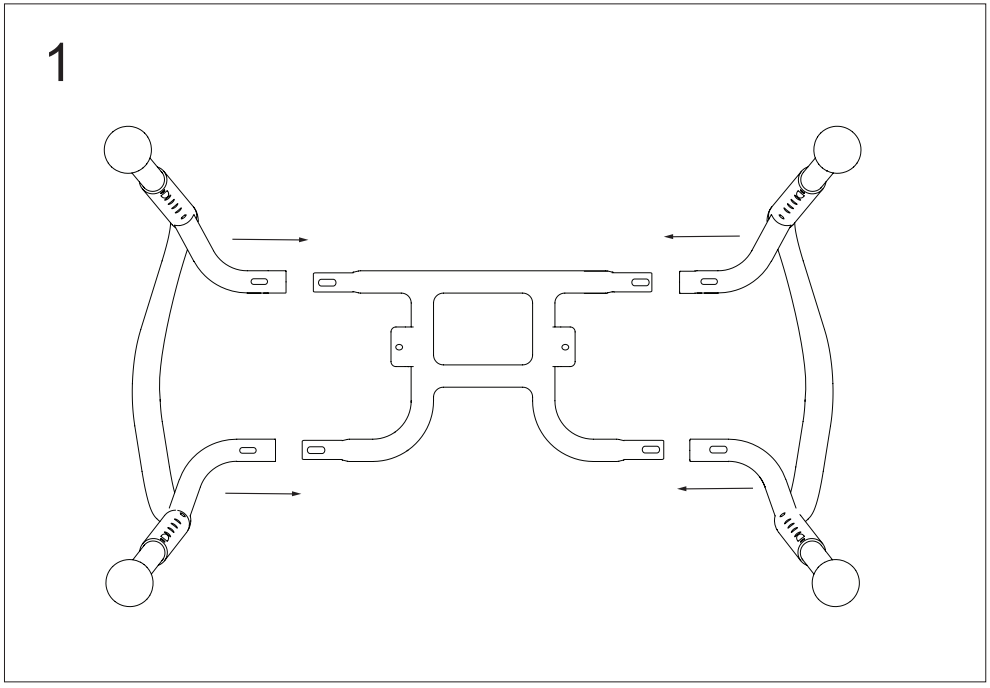
1

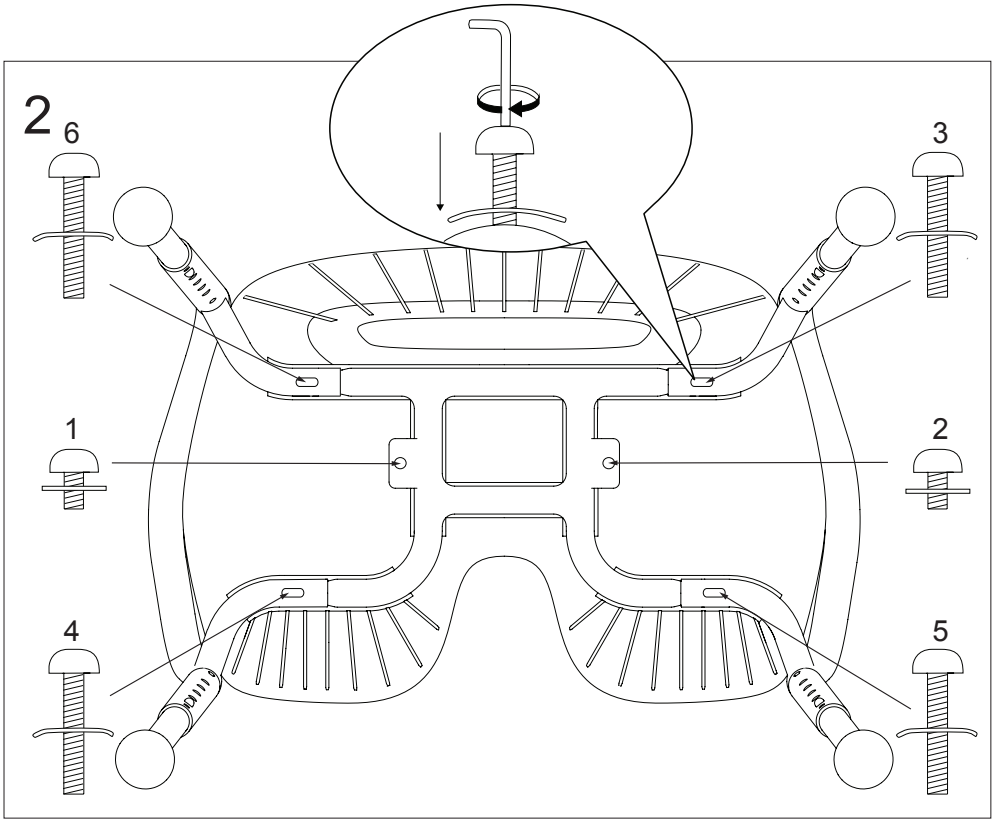
2
6
3
1
2
4
5

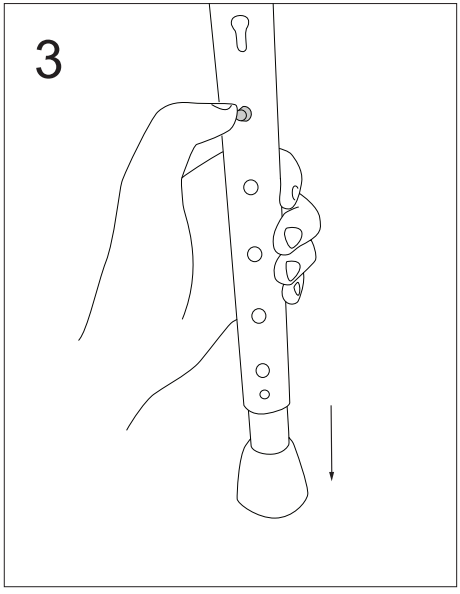
3

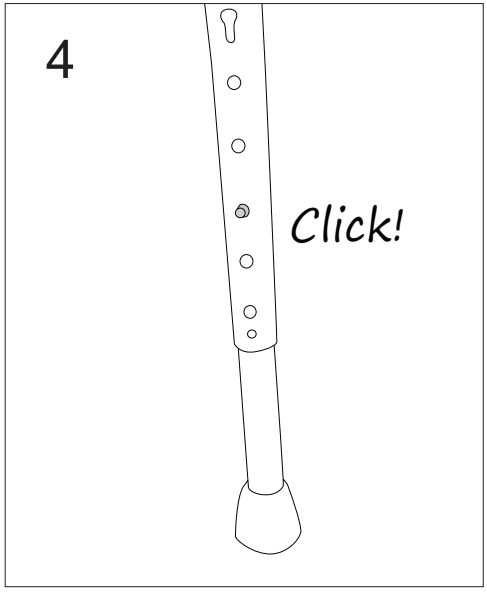
4
Click!

ENGLISH

Let's Enjoy is a new bathstool with a modern design to be used in the bathroom and shower. It has a beautiful and stable construction for safe and secure use. The height of Let's Enjoy can easily be adjusted to the desired position with the buttons on the legs.

Warning: A defective product must not be used.
Warning: Always adjust all of the legs to the same height to avoid falling accidents because of the stool becoming unsteady.
Warning: The stool is not intended for use in hot or humid places like a sauna. The stool should also not be exposed to direct sunlight for extended periods of time - this could damage the seat.
The seat can withstand temperatures up to 78°C. However the seat should not exceed 41°C when used in recommended settings. Extended exposure to direct sunlight and hot temperatures exceeding 41°C are not considered within the range of normal use.
Warning: The seat can be damaged if it is loaded with heavy or sharp objects. Do not stand on the bathstool. Do not sit on the edge of the bathstool. Do not overload the stool. Make sure the seat is not moving or rotating when standing up or sitting down. Do not remove the rubber feet. If any of the rubber feet are missing or in bad condition they need to be replaced before use again.
Warning: If there is any signs of corrosion on the product do not use it. Corrosion can make the stool unsafe to use. The stool should not be used if the frame is bent or damaged in any way. There must be no cracks or other damage to plastic parts. The height adjustment buttons must snap properly into the adjustment holes before use.
Persons with **cognitive impairment** should be assisted when using the Let's Enjoy bathstool.
A **.pdf version** of this user manual is available for download from the Trust Care website **www.trustcare.se** This version can be scaled up if required and read on screen or printed out at a larger scale for use by **visually impaired** persons and those with **reading difficulties.**
The **expected lifetime** of this bathstool is 10 years.
Repair: Any required repairs must be carried out by skilled and qualified personal. Make bimonthly checks of the stool. Check for any damage and rust on all parts of the stool and its accessories and check for any missing parts. Use only original accessories and original spare parts from Trust Care. Spare parts can be ordered from Trust Care. Always make sure the legs are adjusted to the same height setting. If there are any missing parts when opening the box, please contact your reseller or Trust Care.

Technical data:
Material: Seat ABS, Tube frame aluminium, Feet TPE
Weight: 2.4 kg
Max user weight: 150 kg
Height: Adjustable from 42 to 56 cm
Colour: Seat black, legs black, feet black

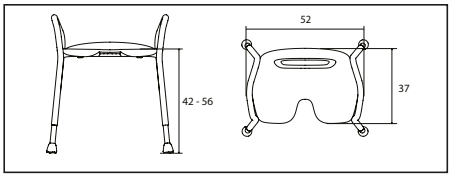

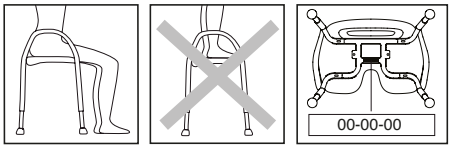

The stool is intended to sit on. Do not stand on the stool because of the risk of falling accidents.

Max user weight: Do not overload. Maximum user weight is 150 kg.
Cleaning: Use detergent without solvent, pH 5 – 9, or 70% disinfection spirit. Do not place any items in the dishwasher.
Decontamination: Use alkaline detergent pH min 6, in max 85°C/185°F for no more than 3 min.
Spare parts: Use only original accessories and original spare parts from Trust Care.

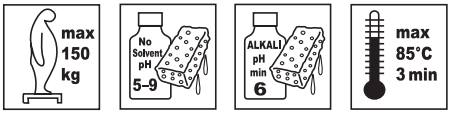

Återvinning / Genbrug / Recycling / Recycling / Recycling / Riciclaggio / Recyclage

Denna produkt skall återvinnas i enlighet med nationella riktlinjer.

Dette produkt skal genbruges i overensstemmelse med nationale retningslinjer.

This product should be recycled in accordance with national guidelines.

Dit product moet worden gerecycled in overeenstemming met de nationale richtlijnen.

Dieses Produkt sollte gemäß den nationalen Richtlinien recycelt werden.

Questo prodotto deve essere riciclato in conformità con le linee guida nazionali.

Ce produit doit être recyclé conformément aux directives nationales.

Garanti / Garanti / Warranty / Garantie / Garantie / Garanzia / Garantie

2 års garanti mot fel i material och tillverkning.

2 års garanti mod fejl i materialer og fremstilling.

2 year warranty against defects in materials and manufacturing.

2 jaar garantie op fabricagefouten.

2 Jahre Garantie auf Material- und Herstellungsfehler

2 anni di garanzia sui difetti del materiale e di fabbricazione.

2 ans de garantie contre tout défaut de matériau ou vice de fabrication.

TRUST CARE COLLECTION

LET'S SING
Art no. LSG 101

LET'S STEP
Art no. LST101

LET'S SHOWER
Art no. LSH101

LET'S FRISBEE
Art no. LFR101

Tillbehör / Tilbehør / Accessories / Accessoires / Zubehör / Accessori / Accessoires

LET'S SING BASKET
Art no. LSG107

SVENSK

Let's Sing Trådkorg.
En elegant trådkorg finns som tillbehör till Let's Sing. Enkel och praktisk att applicera under sitsen med en enkel snäppanordning.
Trådkorgen är bra för att förvara tvål, schampo eller duschsvamp.

DANSK

Let's Sing-trådkurv.
En elegant trådkurv fås som tilbehør til Let's Sing. Enkel og praktisk at anvende under sædet med en simpel fastgøring. Trådkurven er fantastisk til opbevaring af sæbe, shampoo eller badesvamp.

ENGLISH

Let's Sing String basket.
An elegant string basket is available as an accessory for Let's Sing. Practical and easy to attach under the seat with a snap fastening.
The string basket is good for storing schampoo or a bath sponge.

NEDERLANDS

Let's Sing opbergmandje.
Als accessoire voor Let's Sing is een elegant opbergmandje verkrijgbaar. Kan dankzij een klikbevestiging eenvoudig onder de zitting worden vastgezet. Dit mandje is handig voor het opbergen van zeep, shampoo of washandjes.

DEUTSCH

Drahtkorb Let's Sing.
Dieser elegante Drahtkorb ist als Zubehör für Let's Sing erhältlich. Er lässt sich dank einer einfachen Schnappvorrichtung leicht und praktisch unter der Sitzfläche anbringen. Der Drahtkorb eignet sich gut für die Verwahrung von Seife, Shampoo oder Duschschwamm.

ITALIANO

Let's Sing cestello.
Un elegante cestello per completare Let's Sing.
Facile e pratico da fissare sotto la seduta con un semplice dispositivo a scatto, il cestello è utilissimo per riporre sapone, shampoo o spugna.

FRANÇAIS

Corbeille fil Let's Sing.
Une élégante corbeille fil, disponible comme accessoire pour Let's Sing. Simple et pratique à placer sous le siège, grâce à un simple dispositif à encliquer. La corbeille fil permet de ranger savon, shampooing ou éponge de douche.

LET'S GO
INDOOR ROLLATOR
Art no. 0020

LET'S GO OUT
OUTDOOR ROLLATOR
Art no. 0150

reddot award 2014
winner

LET'S TWIST AGAIN

Art no. 0112

TRUST CARE

www.trustcare.se

2016.04